calpeda®

catalogue

Edition 03-09/2025

天保發展國際有限公司
Tin Po Development International Limited

ed. 07/2025

we connect water to people



water passion

I-MPC



EASY TO INSTALL
Plug And play solution

ECONOMIC SAVING
High efficiency single-phase motor

EASY TO USE
Equipped with programmable logic, the product allows programming through a simple and intuitive display.

Self-priming swimming pool pumps boosting system with integrated control

I-MPC

Construction

Self-priming swimming pool pumps with built-in strainer and motor insulated from pumped water.
The pump is made with high quality plastic materials, corrosion and sand erosion resistant.
With stainless steel diffuser.
Base-plate kit.

Applications

For water circulation in swimming pool filtration systems.
For clean or slightly dirty water with solids in suspension.

Operating conditions

Liquid temperature from 0 °C to +40 °C.
Ambient temperature up to 40° C.
Maximum permissible pressure in the pump casing 2,5 bar.
Continuous duty.

Motor

2-pole induction motor.
Nominal speed 3970 rpm
Motor: variable speed
Frequency: 50-60 Hz
Single-phase 220-240V~50Hz/220V~60Hz, with thermal protector.
H07RN-F cable, 3G1.5 mm2, length 1.5 m, with CEI-UNEL 47166 plug.
Insulation class F.
Protection IP X4.
Constructed in accordance with EN 60034-1, EN 60335-1, EN 60335-2-41.

Features

- integrated frequency converter
- high efficiency asynchronous motor
- motor power control
- voltage and current control
- monitoring of maximum starting current

Protections

- dry-run protection
- detects the presence of air in the pump casing
- overload control and overheating motor control
- pump blockage
- power supply control
- starts per hour control
- detects small leakages in the system

Designation

Example: I-MPCM 31
I = Version with integrated frequency converter
MPC = Series
M = Single-phase version (no indication: three-phase)
31 = Pump type

Materials

Components	Materials
Pump casing	Noryl PPO-GF30
Diffuser cover	Noryl PPO-GF30
Impeller	Noryl PPO-GF30
Strainer cover	Lexan
Strainer basket	Polypropylene
Diffuser funnel and wear-ring	Stainless Steel 1.4401 EN 10088 (AISI 316)
Mechanical seal	Carbon - Ceramic - FPM

Performance

Single-phase

			Q = Flow									
			m³/h	0	2	4	6	8	10	12	14	16
Model	230V	P1	l/min		33,3	66,6	100	133	167	200	233	267
	A	kW	H (m) = Total head									
I-MPCM 31	4,6	1,05		15,6	15,6	15,2	14,4	13,4	11,9	10,2	8,1	5,6

P1: Maximum power input.
H: Total head in m
Tolerances according to UNI EN ISO 9906:2012

I-MPC

Characteristic curves

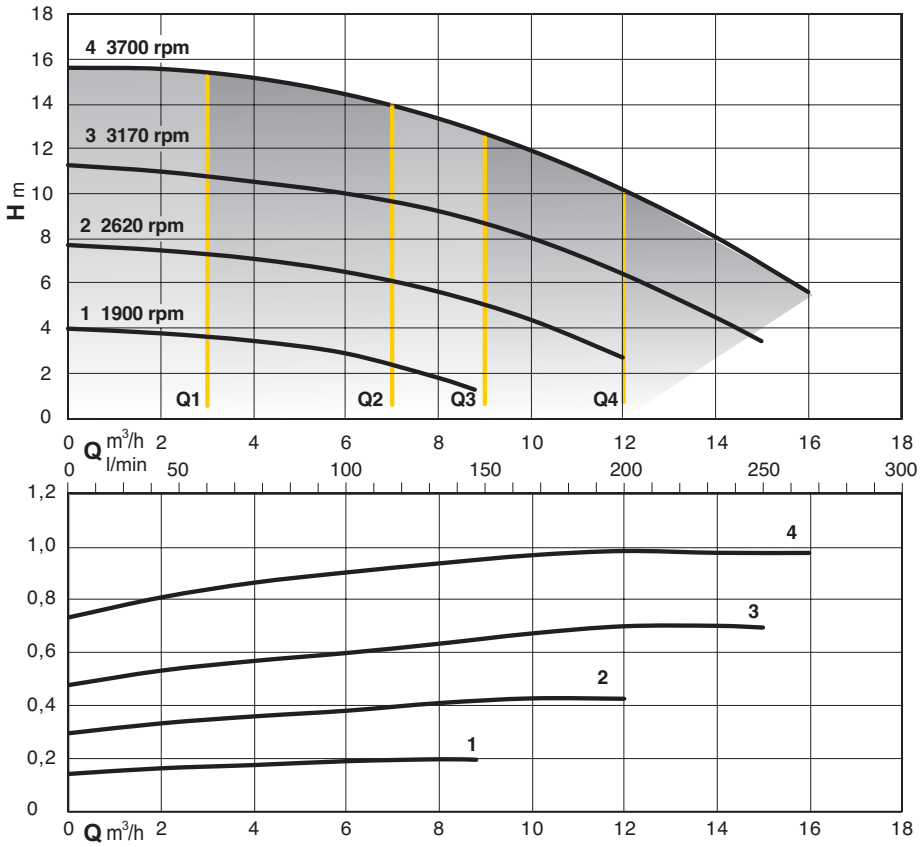

Constant flow mode

Q1 - Q2 - Q3 - Q4
In this mode, the system keeps the preset flow rate constant as the pressure required by the system varies.

Programmable Speed Mode

1 - 2 - 3 - 4
In this mode, by changing the working frequency, it is possible to choose one of the 4 utilization curves included within the working range.

Dimensions and weights

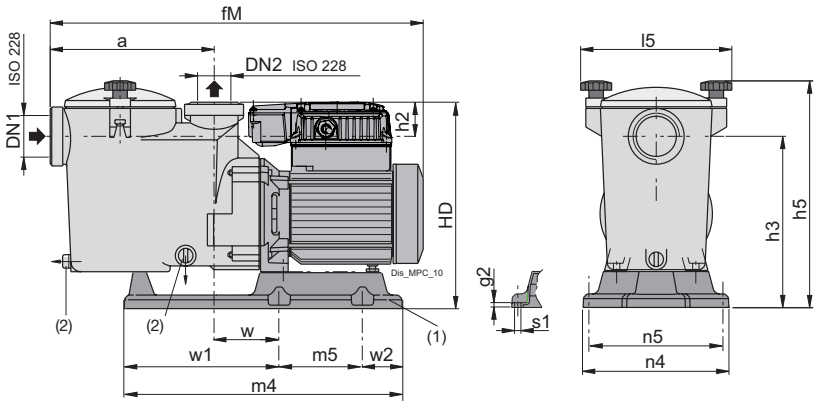

TYPE			mm																kg
	DN1	DN2	a	fM	g2	h2	h3	h5	HD	l5	m4	m5	n4	n5	s1	w	w1	w2	Weight
I-MPCM 31	G2	G1 1/2	235	546	7	50	243	323	293	215	410	123	215	197	9	100	128.5	158.5	12.7

I-MPC

Control Panel



The control panel allows to visualize:
- Initial screen (rUn, OFF, StB, Err)
- Motor Operating Frequency
- Supply current input
- Supply electrical power input
- Supply voltage

Features

Strong transparent Lexan strainer cover
Strong Noryl pump casing
Large capacity strainer basket
Stainless steel AISI 316 wear-ring diffuser-funnel, for extra reliability
Diffuser with peripheral-longitudinal flow, for a quicker self-priming

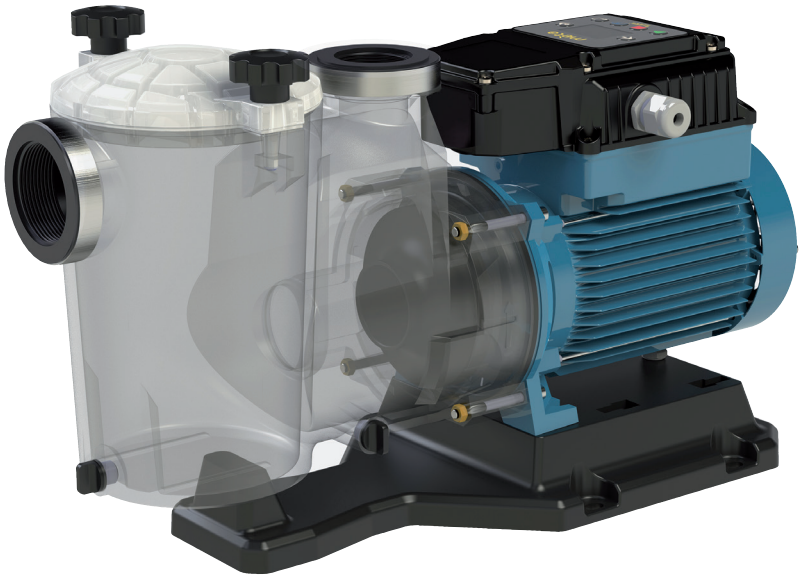

Calpeda in the World

Calpeda Pompes S.A.
19, Rue de la Communauté,
44140 Le Bignon – Francia
Tel: +33 2 40031330
info@calpeda.fr

Calpeda Ibérica, S.A.
Pol. Ind. Ca n'Oller - C/Valencia 17-19 Nave 1
08130 Santa Perpetua de la Mogoda – Spagna
Tel: +34 93 580 24 17
calpeda@calpedaiberica.com

Calpeda Pumpen Vertrieb GmbH
Philipp-Reis-Straße 2,
63755 Alzenau, Germania
Tel: +496023964330
info@calpeda.de

Calpeda Limited
6,8 Wedgwood Road Ind. Estate
Bicester Oxon OX26 4UL – Gran Bretagna
Tel: +44 1869 241441
pumps@calpeda.co.uk

Calpeda Pumps (Ireland) Ltd.
Unit 5, Old Quarry Campus –
Kilshane Park Blanchardstown
Co. Dublin 15 – Irlanda
Tel: +353 1 8612200
info@calpedaireland.com

Calpeda Pumps Southern Africa
Unit 3, Kingsley Close – Warbler Cl
7800 Cape Town – Sudafrica
Tel: +27 10 442 2200
pumps@calpeda.co.za

Calpeda Asia Pacific Pte Ltd
3, Gul Street 1
629316 – Singapore
Tel: +65 68984111
sales@calpeda-asiapac.com

Calpeda China Beijing Pump Co. Ltd.
No.15-12A South Jingsheng Four Street
Liandong U Valley Science Park
Tongzhou District 101102 – Beijing – Cina
Tel: +86 10 59770570/71/72
calpeda@calpeda.cn

Calpeda S.p.A.
Via Roggia di Mezzo, 39 - 36050 Montorso Vicentino - Vicenza - Italy
Tel. + 39-0444 476 476
Web: www.calpeda.com - E-mail: info@calpeda.it

Calpeda Korea Co, Ltd
508-B – 121, Digital-ro – Geumcheon-gu
08505 – Seoul Rep. of Corea
Tel: +82 31 4999550
calpedakr@calpedakorea.com

Calpeda Taiwan Co Ltd
No.367-1, Fongren Road – Renwu Township
81449 Kaohsiung County – Taiwan
Tel: +886 7 3723855
calpeda@calpeda.com.tw

Calpeda Malaysia Sdn Bhd
No 40, Jalan 5/KU6, Kaw Perindustrian Sg Puloh
42100 Klang Selangor – Malaysia
Tel: +60 3 3292 9022
enquiry@calpeda-asiapac.com

Calpeda Pumps Pty Ltd
3 Maritime Court
SA 5013 Gillman – Australia
Tel: +61 8 82688880
sales@calpeda.com.au

Calpeda Pumps India PVT Ltd
Sy nu.84/10 pallathal farm
RTO By pass Road,
Yelahanka Bengaluru-560064 - India
Tel: +91 9480809570….79
info_india@calpeda.it

Caprari Hellas SA
Industrial Area of Sindos
Municipality of Ehedorou
57022 Thessaloniki - Grecia
Tel. +30 2310 797967
info@caprari.gr

Caprari Tunisia SA
Rue Annaba - Z. Ind.elle Ben Arous
2013 Ben Arous - Tunisia
Tel. +216 79 390001
tunisie@caprari.com

Caprari Portugal LDA
Rua Matadouro Regional Lt 46 Armaz B/C
Zona Industrial
2005-002 Santarém - Portogallo
Tel. +351 243 350610
geral@caprariportugal.com

天保發展國際有限公司
Tin Po Development International Limited

Tin Po Development International Limited
Flat A, 6/F, Phase 1, Yee Lim Industrial Building,
32-40 Kwai Ting Road, Kwai Chung, N.T.
Tel: +852 2152 0052 Fax: +852 2152 0021
Email: info@tinpodev.com

water passion